Manual

FD-R Basic

Item no. 42-01110 | 42-01111

Function decoder

MM | DCC | RailCom

tams elektronik

Contents

The asterisks **

RailCom® is the registered trademark of:

Lenz Elektronik GmbH | Vogelsang 14 | DE-35398 Gießen

To increase the text´s readability we have refrained from refering to this point in each instance.

This manual mentions the following companies:

Gebr. MÄRKLIN & Cie. GmbH

Stuttgarter Str. 55-57 | DE-73033 Göppingen

Subject to technical modification.

1. Getting started

How to use this manual

This manual gives step-by-step instructions for safe and correct fitting and connecting of the decoder, and operation. Before you start, we advise you to read the whole manual, particularly the chapter on safety instructions and the checklist for trouble shooting. You will then know where to take care and how to prevent mistakes which take a lot of effort to correct.

Keep this manual safely so that you can solve problems in the future. If you pass the decoder on to another person, please pass on the manual with it.

Intended use

The function decoder FD-R Basic is designed to be operated according to the instructions in this manual in model building, especially in digital model railroad layouts. Any other use is inappropriate and invalidates any guarantees.

The function decoder FD-R Basic should not be mounted by children under the age of 14.

Reading, understanding and following the instructions in this manual are mandatory for the user.

Checking the package contents

Please make sure that your package contains:

- one or five function decoders, depending on the version
  without soldered connecting wires or
  with soldered connecting wires;
- a CD (containing the manual and further information).

Required materials

For mounting and connecting the decoder you need:

- an electronic soldering iron (max. 30 Watt) or a regulated soldering iron with a fine tip and a soldering iron stand,
- a tip-cleaning sponge,
- a heat-resistant mat,
- a small side cutter, a wire stripper and a pair of tweezers,
- electronic tin solder (0.5 mm diameter).

In order to connect decoders without soldered connecting wires you will need wire. Recommended cross sections: ≥ 0.04 mm² for all connections.

In order to bridge short current interruptions you need:

- an electrolytic capacitor with a capacity of 100 to 470 µF and a proof voltage of minimum 25 V.

2. Safety instructions

Caution:

Integrated circuits (ICs) are inserted on the decoder. They are sensitive to static electricity. Do not touch components without first discharging yourself. Touching a radiator or other grounded metal part will discharge you.

Mechanical hazards

Cut wires can have sharp ends and can cause serious injuries. Watch out for sharp edges when you pick up the PCB.

Visibly damaged parts can cause unpredictable danger. Do not use damaged parts: recycle and replace them with new ones.

Electrical hazards

- Touching powered, live components,
- touching conducting components which are live due to malfunction,
- short circuits and connecting the circuit to another voltage than specified,
- impermissibly high humidity and condensation build up

can cause serious injury due to electrical shock. Take the following precautions to prevent this danger:

- Never perform wiring on a powered module.
- Assembling and mounting the kit should only be done in closed, clean, dry rooms. Beware of humidity.
- Only use low power for this module as described in this manual and only use certified transformers.
- Connect transformers and soldering irons only in approved mains sockets installed by an authorised electrician.
- Observe cable diameter requirements.
- After condensation build up, allow a minimum of 2 hours for dispersion.
- Use only original spare parts if you have to repair the kit or the ready-built module.

Fire risk

Touching flammable material with a hot soldering iron can cause fire, which can result in injury or death through burns or suffocation. Connect your soldering iron or soldering station only when actually needed. Always keep the soldering iron away from inflammable materials. Use a suitable soldering iron stand. Never leave a hot soldering iron or station unattended.

Thermal danger

A hot soldering iron or liquid solder accidentally touching your skin can cause skin burns. As a precaution:

- use a heat-resistant mat during soldering,
- always put the hot soldering iron in the soldering iron stand,
- point the soldering iron tip carefully when soldering, and
- remove liquid solder with a thick wet rag or wet sponge from the soldering tip.

Dangerous environments

A working area that is too small or cramped is unsuitable and can cause accidents, fires and injury. Prevent this by working in a clean, dry room with enough freedom of movement.

Other dangers

Children can cause any of the accidents mentioned above because they are inattentive and not responsible enough. Children under the age of 14 should not be allowed to work with this kit or the ready-built module.

Caution:
Little children can swallow small components with sharp edges, with fatal results! Do not allow components to reach small children.

In schools, training centres, clubs and workshops, assembly must be supervised by qualified personnel.

In industrial institutions, health and safety regulations applying to electronic work must be adhered to.

3. Safe and correct soldering

Caution:

Incorrect soldering can cause dangers through fires and heat. Avoid these dangers by reading and following the directions given in the chapter **Safety instructions**.

- Use a small soldering iron with max. 30 Watt. Keep the soldering tip clean so the heat of the soldering iron is applied to the solder point effectively.
- Only use electronic tin solder with flux.
- When soldering electronic circuits never use soldering-water or soldering grease. They contain acids that can corrode components and copper tracks.
- Solder quickly: holding the iron on the joints longer than necessary can destroy components and can damage copper tracks or soldering eyes.
- Apply the soldering tip to the soldering spot in such a way that the wire and the soldering eye are heated at the same time. Simultaneously add solder (not too much). As soon as the solder becomes liquid take it away. Hold the soldering tip at the spot for a few seconds so that the solder flows into the joint, then remove the soldering iron.
- The joint should be held still for about 5 seconds after soldering.
- To make a good soldering joint you should use a clean and unoxidised soldering tip. Clean the soldering tip with a damp piece of cloth, a damp sponge or a piece of silicon cloth.
- After soldering check (preferably with a magnifying glass) tracks for accidental solder bridges and short circuits. This would cause faulty operation or, in the worst case, permanent damage. You can remove excess solder by putting a clean soldering tip on the spot. The solder will become liquid again and flow from the soldering spot to the soldering tip.

4. Operation overview

The FD-R Basic can be used as

- a function decoder, e.g. to switch the lighting in a control car and / or
- a RailCom transmitter in addition to a locomotive or function decoder that is not compatible to RailCom.

4.1. Modes of operation

Digital operation

The function decoder FD-R Basic is a multiple protocol decoder, that can operate with and automatically recognise both DCC or Motorola formats.

The number of addresses is dependant on the format being used:

- Motorola-Format: 255 addresses,
- DCC-Format: 127 Basis-addresses or 10.239 Basic addresses.

In the DCC format the decoder can be driven in all speed levels (14, 28 or 128).

Programming the decoders is done:

- in Motorola format by setting the registers,
- in DCC format by setting the configuration variables (direct programming, DCC conform) or by POM (programming on main = main track programming).

Analogue mode

The decoder can also be used in analogue model railway layouts run with a D.C. speed control, and with restrictions with an A.C. speed control. When putting the vehicle on the rails the decoder recognizes automatically if it is run in analogue or digital mode and sets the corresponding operation mode. The automatic recognition of the analogue mode can be switched off.

Caution:

Old analogue driving transformers (e.g. models in a blue housing from Märklin**) are not suitable for use with digital decoders in analogue operation! These transformers have been designed for the older supply voltage of 220 V and, due to construction, generate very high excess voltage impulses when changing the driving direction. When using them with the modern supply voltage of 230 V too high excess voltage impulses can occur, damaging electronic parts on the decoder. For that reason only use driving transformers designed for a net voltage of 230 V.

Switching the function outputs on or off is not possible in analogue mode. They can be programmed so that they are either switched on or off in analogue mode. The effects set for the outputs are active in analogue mode as well.

Outputs to be switched with F0 are switched on or off in analogue mode according to the direction of travel with layouts run with a D.C. speed control (not with an A.C. speed control), provided the return conductor of the lamps or accessories is connected to the decoder´s return conductor for all functions.

4.2. Function outputs

The decoder has two function outputs with a maximum current of 300 mA each, which are available to connect optional accessories (e.g. lighting, smoke generator, electric coupling).

Effects of all function outputs

- Switching on and off depending on the direction of travel.
- Flashing. Both the frequency and the keying ratio can be set. E.g. single flash lights or strobe lights.
- Dimming: Example of use: The electric bulbs of older vehicles made for analogue operation can be dimmed and thus must not be exchanged after the mounting of the decoder.

4.3. Releasing the functions

The function outputs can be released by pushing the function keys. The mapping of the outputs to the function keys is arbitrary. It is possible to assign several function keys and switching inputs to one output.

Output	DCC format	MM format
AUX1 and AUX2	F0 to F12	F0 to F4 or F5 to F9 (= F0 to F4 of a 2nd decoder address)

4.4. Feedback with RailCom**

RailCom is a log for bi-directional communication in digital model railway layouts controlled in DCC-format. It allows e.g. the feedback of the address and the CV values from the decoder to the digital central unit or to special receivers (so-called detectors). The decoders must be designed to send the RailCom messages.

The FD-R Basic has a special RailCom memory area, from which (continuously) the (basic, extended or consist) address is sent to the detectors (so-called RailCom broadcast datagramm) and from which a CV message can be transferred after a DCC CV read-out command.

The FD-R Basic can be used as a function decoder compatible to RailCom with a particular address or it can be mounted in addition to a DCC or Motorola locomotive or function decoder that is not compatible to RailCom. In this case it serves as a RailCom transmitter (should the occasion arise to switch additional functions). After taking over the settings of the non compatible decoder into the memory area of the FD-R Basic they can be sent as RailCom messages. .

Sending RailCom messages is only possible in layouts with a DCC signal on the rails. It is not possible to use the RailCom-function in a pure Motorola environment.

5. Technical specifications

Data format	DCC and MM
Feedback log	RailCom
Supply voltage	12-24 V digital voltage or max. 18 V analogue voltage
Current consumption (without connected loads) max.	10 mA
Max. total current	700 mA
Number of function outputs max. current per output	2 300 mA
Connection for buffer capacitor Capacity Electric strength	1 100 to 470 µF ≥ 25 V
Protected to	IP 00
Ambient temperature in use	0 ... +60 °C
Ambient temperature in storage	-10 ... +80 °C
Comparative humidity allowed	max. 85 %
Dimensions	approx. 12,5 x 9,5 x 3,3 mm
Weight without cables with cables	 approx. 0,6 g approx. 1,1 g

6. Connections

Note the following comment in order to protect the decoder from (maybe irreparable) damage!

Avoid all conducting connections between the decoder and accessories connected to the decoder´s common return conductor for all function outputs on the one hand and metal parts of the vehicle or the rails on the other hand. Connections result for example from badly isolated connecting wires (as well at the stripped ends of connecting wires not in use) or insufficient fixing and isolating the decoder or the accessory, for example. Risk of short circuit!

Before connecting the lighting and other accessories to the outputs check if the output´s current is below the maximum permissible value per output and the total current is below the safe load. Should the permissible output current be exceeded, this normally results in damage to the decoder.

You should under no circumstances connect the decoder´s return conductor for all functions to vehicle ground. Risk of short circuit!

Old analogue driving transformers (e.g. models in a blue housing from Märklin**) are not suitable for use with digital decoders in analogue operation! These transformers have been designed for the older supply voltage of 220 V and, due to construction, generate very high excess voltage impulses when changing the driving direction. When using them with the modern supply voltage of 230 V too high excess voltage impulses can occur, damaging electronic parts on the decoder. For that reason only use driving transformers designed for a net voltage of 230 V.

6.1. Connector pin assignment

	Colour of wire	Connection to (for use of settings in state of delivery)
X1	white	AUX1 (lighting forward motion, function key F0)
X2	yellow	AUX2 (lighting backward motion, function key F0)
X3	brown	Negative pole (-) of buffer capacitor
X4 X5	black red	Current collector (right / left in direction of motion): X4= left current collector (or vehicle ground) X5= right current collector (or slider)
X6	blue	Return conductor for all functions (+) Positive pole (+) of buffer capacitor

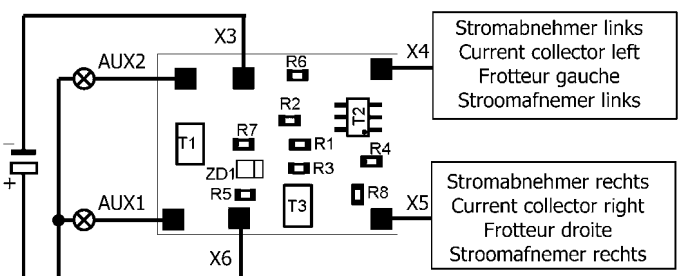

Fig. 1: Connections

6.2. Connection to the voltage supply

When connecting the vehicle´s current collectors check the right assignment (left / right). When interchanging the connections, the outputs switched depending on the direction of motion will be switched incorrectly in regard to the direction of travel.

6.3. Connecting accessories to the outputs

Disconnect any existing diodes in the leads to the lamps, otherwise the lamps might not light. Connect the lamps and the accessories to the function outputs of the decoder (AUX1 and AUX2).

When you want to use the factory (default) settings of the decoder, check the preceding list. Otherwise you can assign the outputs to the function keys voluntarily by setting the configuration variables.

If the lamp or the accessory is already connected with one side to vehicle ground, the connection is complete. If not, connect the second side of the lamp or the accessory to the decoder´s return conductor for all functions (point X6).

6.4. Connecting LEDs to the function outputs

The decoder´s function outputs switch respective to the decoder ground. For that reason you must connect the cathodes (-) of the LEDs to the function outputs and the anodes (+) to the decoder´s common return conductor for all function outputs (point X6).

Caution:

If you use light-emitting diodes (LEDs) you must always operate them via a series resistor, otherwise they will be damaged when put into operation or their duration of life will be reduced considerably!

When doing without a series resistor, other components undertake the series resistor´s function (e.g. rails, wheels, current connectors), possibly leading to a modification of the data signal and thus to disturbances in digital operation.

Always determine the necessary series resistor´s value for the peak value of the available operating voltage. With regulated boosters this corresponds to the specified boosters´ output (= track) voltage. With not regulated boosters or analogue driving transformers the peak value is approx. 1,4 fold the nominal voltage specified on the transformer.

Serial connection of LEDs

When you want to connect several LEDs to one output you can switch them in series via a common series resistor. The current consumption is max. 20 mA for all LEDs, depending on the series resistor´s value. The maximum number of LEDs to be connected in series results from

Peak value of the operating voltage
- sum of the forward voltages of all LEDs
> 0

The advantage of this solution is the low current consumption.

In order to determine the necessary series resistor for a serial LED´s connection first add the forward voltages of all LEDs. The forward voltages depend on the lighting colour and should be given in the technical specifications. In case there is no manufacturer information available, you can take as a basis 4 V for white and blue LEDs and 2 V for yellow, orange, red and green LEDs.

The remaining voltage has to be "eliminated" by a resistor. The formula for the calculation of the resistor is:

required R_V [Ohm] = (U_B [V] – $\sum U_F$ [V]) / (I_F [mA] x 0.001)

U_B = operating voltage (peak value) | $\sum U_F$ = sum of the forward voltages of all LEDs
I_F = current with max. luminosity

Parallel connection of LEDs

Alternatively, you can connect several LEDs in parallel, each via a series resistor of its own. The current consumption is max. 20 mA for all LEDs, depending on the series resistor´s value. The maximum number of LEDs to be connected in parallel results from

maximum current at the output
- sum of the current consumption of all LEDs
> 0

Advantageous with this solution is that the LEDs already lighten when their forward voltage has been reached (2 to 4 V, depending on the

fluorescent colour), which makes this solution suitable for analogue mode. Disadvantageous is the high current consumption.

The formula for the calculation of the resistor is:

required R_V [Ohm] = (U_B [V] – U_F [V] / (I_F [mA] x 0.001)

U_B = operating voltage (peak value) | U_F = forward voltage of the LED

I_F = current with max. luminosity

In order to save current, you can limit the LEDs´current consumption to 10 mA, which normally does not cause a visible loss of luminance.

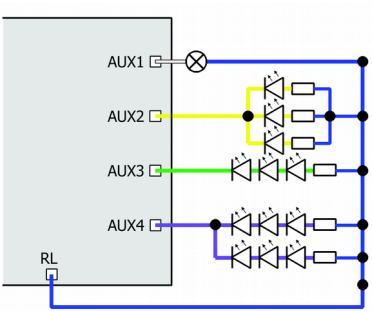

Fig. 2: Connection of LEDs and accessories to the funtion outputs (examples)

AUX1: lamp

AUX2: parallel connection of LEDs

AUX3: serial connection of LEDs

AUX4: combination of parallel and serial connection of LEDs

6.5. Connecting inductive loads

When connecting inductive loads (e.g. TELEX couplings, relays or other accessories with coils), you should switch a free-wheeling diode (e.g. 1N400x) in parallel, in order to avoid damage at the output. Check to connect the anode of the diode to the function output.

6.6. Connecting accessories via a relay

When you want to switch an accessory / accessories via the decoder, which connection would lead to exceeding the maximum current at the output or of the decoder, you can switch the accessories via a relay (e.g. 1xUm 1A 12V, item no. 84-61010) and connect them directly to

(e.g. 1xUm 1A 12V, item no. 84-61010) and connect them directly to the vehicle´s current collector. As described in the section "Connecting inductive loads" you should switch a free-wheeling diode (e.g. 1N400x) in parallel to the relay.

The current consumed by the relay depends on its type. The relay named in the example needs approx. 100 mA.

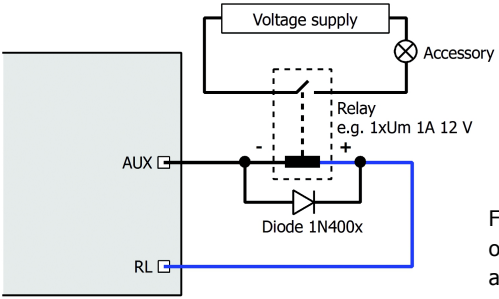

Fig. 3: Connection of an accessory via a relay

6.7. Connecting a buffer capacitor

In sections with bad contact to the rails the power supply of the decoder can be interrupted. Possible consequences are e.g. flickering lighting. In these and similar cases you can find a remedy by connecting a buffer capacitor. The electrolytic capacitor should have a capacity of 100 to 470 µF and an electric strength of minimum 25 V. Observe the correct polarity when connecting the capacitor!

6.8. Fixing the decoder

After having finished all connections you should fix the decoder, to avoid short circuits by contact to metal parts of the vehicle, for example. You can use double sided adhesive tape for it, for example.

7. Programming

7.1. Programming with different types of central units

Programming with DCC central units

You can programm the registers or configuration variables (CV) of the decoder from the digital central unit, you can use main track programming as well. See the chapter in the manual of your central unit where the byte wise programming of configuration variables (CVs) (Direct programming) and main track programming (POM) are explained. With central units that allow only register-programming it is only possible to program the variables CV#1 and CV#29 (= register 1 and 5).

Please note: In DCC-Format the feedback signal will not be sent by the central unit unless there is a sufficient current. For that reason you should mount an accessory with a current consumption of minimum 100 mA to one of the outputs before starting to program the function decoder.

Programming with Motorola central units

In Motorola format the settings are saved in registers.

Please note: If you use a central unit for both DCC and Motorola format it is recommended to program the decoder in the DCC format. After having finished programming the decoder it is possible to control it in Motorola format as well.

Please note: You should connect a lamp or a LED to at least AUX1 or AUX2 before starting to program the decoder with a Motorola central unit, as the decoder shows the status of the programming by flashing the lighting connected to the outputs AUX1 and AUX 2. The flashing frequency shows, which input the decoder expects:

Slow flashing	Fast flashing
Number of the register to be programmed	**Value** of the register to be programmed

Put the vehicle on a track oval or a track section connected to the central unit's track output (not to the connection for the programming track). Make sure no other vehicle than the one you intend to program is set on the track as the decoder inside this vehicle might be programmed as well.

Starting the programming mode	Programming the decoder
1. Switch on the central unit or perform a reset at the central unit (pushing "stop" and "go" simultaneously). 2. Set the current decoder address (default value: 3) or the address "80". 3. Set all functions to "off". 4. Push button "stop" → switch off the track voltage. 5. Operate the direction switch and hold it in that position. Push the button "go" at once. 6. As soon as the lighting flashes, release the direction switch.	1. Enter the number of the register as a Motorola-address. If necessary: with a leading "0". 2. Operate the direction switch. → Lighting flashes faster. 3. Enter the value you want to set into the register (as Motorola-address). 4. Operate the direction switch. → Lighting flashes more slowly. Repeat steps 1 – 4 for all registers. Push button "stop".
→ Programming mode	→ End of programming mode

Programming with central units with restricted input options

Some central units do not allow but input values up to 80 or 99. With these central units it is not possible to make all possible settings.

Programming with the Central Station and the Mobile Station

With the Central Station I or the Mobile Station of Märklin** you can program the registers. Select the article no. 29750 from the locomotive database and program the decoder as described for this article in the Central Station´s or Mobile Station´s manual.

Programming with the CV-Navi

Instead of programming the configuration variables or registers of the decoder using the digital central unit, you can use the free software CV-Navi. You will find the free download under:

www.tams-online.de

7.2. Memory areas of the FD-R Basic

The FD-R Basic has two memory areas programmed separately:

- the function decoder area containing all data necessary for use as function decoder and
- the RailCom area containing all data to be reported via RailCom.

Use as	Function decoder area	RailCom area
independent function decoder	Programming as vehicle decoder	Data from the function decoder area of the FD-R Basic to be reported via RailCom
RailCom transimitter for vehicle decoders not compatible to RailCom	--- (possibility to program as additional function decoder)	Data from the decoder not compatible to RailCom to be reported via RailCom

Common CVs and registers for both memory areas

The following configuration variables (DCC format) or registers in (MM format), are programmed jointly for the function decoder and the RailCom area and cannot be changed separately for one of the areas:

- basic address (CV#1 / register #01)
- extended addresses (CV#17 and 18, register #04 and 05)
- consist address (CV#19, register #06)
- configuration data (CV#29, register #07)

7.3. Programming sequence

Choosing the memory area to be programmed

By switching RailCom on or off in CV#29 (DCC format) or register #7 (Motorola format) when starting the programming operation, you determine if you program the function decoder area or the RailCom area.

Choosing the memory area	Memory area to be programmed
in CV#29: add "0" → RailCom **off**	function decoder area → all data necessary for use as function decoder
in CV#29: add "8" → RailCom **on**	RailCom area → data to be reported via RailCom

Programming the function decoder area of the FD-R Basic

RailCom **off** → in CV#29 / Register #7: add "0"

When using the FD-R Basic as a function decoder with a particular address, it is programmed as used with vehicle decoders.

Please note: Data from the function decoder area of the FD-R Basic are not transmitteed automatically to the RailCom area (except for the addresses and configuration variables 1).

Please note: If the FD-R Basic gets the same address as another decoder in the same vehicle, the mentioned decoder will be programmed anew as well. If you want to avoid this, you can interrupt the decoder´s connection to a rail collector before programming the FD-R Basic .

Advice: When not using the FD-R Basic as a RailCom transmitter, RailCom should be switched off.

Programming the RailCom area of the FD-R Basic

RailCom **on** → in CV#29 / Register #7: add "8"

Please note: The function decoder area and the RailCom area are **not** programmed simultaneously (except addresses and configuration data 1).

All settings made for this area can be reported via RailCom. You can save in this RailCom area either the values of CVs #1 to #205 of a DCC decoder (that is not compatible to RailCom) or the registers #1 to #205 of a Motorola decoder (that is not compatible to RailCom) or the settings from the function decoder area of the FD-R Basic.

TIP: When using the FD-R Basic both as a function decoder and as RailCom transmitter, first program the function decoder area as described in the previous section.

Simultaneously programming the FD-R Basic and another vehicle decoder

When you want to use the FD-R Basic together with another vehicle decoder (not compatible to RailCom) with the same address for both decoders, you should start with reading out and noting if necessary the settings of the vehicle decoder.

When using the FD-R Basic as a RailCom transmitter exclusively and not as an additional function decoder, you can skip the following step.	
in CV#29: add "0" → RailCom **off**	Programming the function decoder of the FD-R Basic and the vehicle decoder simultaneously. If you want to program differing settings for one of the decoders, interrupt the other decoder´s connection to a rail collector before programming the CV.

When using the FD-R Basic as an additional function decoder exclusively and not as a RailCom transmitter, you can skip the following step.	
in CV#29: add "8" → RailCom **on**	Programming the RailCom area of the FD-R Basic with data to be reported out via RailCom. Note: If you have programmed the function decoder area of the FD-R Basic before, the RailCom area contains already the values for CV## 1, 17, 18, 19 and 29 (adresses and configuration variables 1).

When using suitable PC software you can read out the decoder´s settings and afterwards re-save them (jointly for the FD-R Basic and the decoder). Ensure that in CV#29 (DCC format) or in register #7 (Motorola format),

- RailCom has to be switched **off** in order to program the function decoder area of the FD-R Basic or
- RailCom has to be switched **on** in order to program the RailCom area of the FD-R Basic.

8. Configuration variables and registers

The following lists shows all configuration variables (for the DCC format) and registers (for the Motorola format), that can be set for the function decoder area of the FD-R Basic.

Except the CVs 1, 17, 18, 19 and 29 or the registers 01, 04, 05, 06 and 07, which are valid for both the function decoder and the RailCom area of the FD-R Basic, the settings are saved in the function decoder area of the FD-R Basic only.

In the lists you will find in the column "CV-no." the numbers of the configuration variables for programming in DCC format and in the column "Rg.-no." the numbers of the registers for programming in Motorola format. The defaults are those values set in the state of delivery and after a reset.

Please note: With variables destined to set several parameters, the

input value has to be calculated by adding the numerical values assigned to the desired parameters.

Setting the address

Name of CVs / registers	CV-no.	Rg-no.	Input value (Default)	Remarks and Tips
Basic address	1	01	1 ... 255 (3)	Range of values in DCC-Format: 1 ... 127
Tip: If a value higher than 127 is set for the basic address and the use of extended addresses in CV#29 is set to off, the decoder does not react to signals in DCC format!				
Extended address	17	04	192 ... 255 (192)	Only for DCC format. Most central units permit entering extended addresses directly. The CVs # 17, 18 and 29 are set automatically to the proper values.
	18	05	0 ... 255 (255)	
Consist address	19	06	1 ... 127 (0)	= 2nd adress In DCC format only!
2nd Motorola address	114	40	1… 255 (4)	= Address needed to switch additional functions in Motorola format. The function keys F5 to F8 are reached via the function keys F1 to F4, the function key F9 via the function key F0.

Information / Read only

Name of CVs / registers	CV-no.	Rg-no.	Input value (Default)	Remarks and Tips
Version	7	–-	---	Read only in DCC format!
Manufacturer	8	–-	--- (62)	Read only in DCC format!

Auxiliary functions

Name of CVs / registers	CV-no.	Rg-no.	Input value (Default)	Remarks and Tips
Reset	8	03	0 ... 255	Any input value restores the settings in state of delivery.

Settings for analogue mode

Name of CVs / registers	CV-no.	Rg-no.	Input value (Default)	Remarks and Tips	
Functions active in analogue mode (only for F1 to F8, not for F9 to F12)	13	41	0 ... 255 (0)	F1 on	1
				F2 on	2
				F3 on	4
				F4 on	8
				F5 on	16
				F6 on	32
				F7 on	64
				F8 on	128

Basic settings

Name of CVs / registers	CV-no.	Rg-no.	Input value (Default)	Remarks and Tips	
Configuration data 1	29	07	0 ... 64 (14)	Direction "Standard"	0
				Reverse direction	1
				14 speed levels	0
				28 or 128 speed levels	2
				Analoge recognition off	0
				Analoge recognition on	4
				RailCom off	0
				RailCom on	8
				Basic addresses	0
			Not for MM mode:	Extended addresses	32

Example: CV#29 = 0. → Direction = "Standard". 14 speed levels. RailCom = "off". Automatic analogue recognition = "off". Basic addresses.

Example: CV#29 = 46. → Direction = "Standard". 28 or 128 speed levels in DCC-mode. Automatic analogue recognition = "on". RailCom = "on". Extended Addresses.

Tip: If the use of extended addresses is activated in CV#29, the decoder does not react to signals in Motorola format!

Tip: In order to program the function decoder area, you have to set RailCom to "off". Programming the data for the RailCom area is done in a separate step with RailCom set to "on".

Assignment of the outputs to the function keys

Name of CVs / registers	CV-no.	Rg-no.	Input value (Default)	Remarks and Tips	
F0 forward on	33	08	0 ... 31 (1)	AUX1	1
F0 backward on	34	09	0 ... 31 (2)	AUX2	2
F1	35	10	0 ... 31 (0)		
F2	36	11	0 ... 31 (0)		
...	...	...	...		
F12	46	21	0 ... 31 (0)		

Factory settings: AUX1 to be switched with F0, switched on at forward motion. AUX2 to be switched with F0, switched on at backward motion.

Example: AUX2 to be switched with F5 → CV#39 = 2

Example: AUX1 and AUX2 to be switched with F6 → CV#40 = 3 (= 1+2)

Dimming of the outputs

Name of CVs / registers	CV-no.	Rg-no.	Input value (Default)	Remarks and Tips
AUX1	49	22	1...64 (64)	= Reduction of the voltage applied to the output. "1" = lowest voltage, "64" = maximum voltage
AUX2	50	23	1...64 (64)	

Effects of the outputs

Name of CVs / registers	CV-no.	Rg-no.	Input value (Default)	Remarks and Tips	
AUX1	53	26	0 ... 255 (0)	Independent of direction	0
AUX2	54	27	0 ... 255 (0)	AUX off at backw. motion	1
				AUX off at forward motion	2
				Shunting light at F3	16
				Shunting light at F4	32
Example: Shunting light at AUX1 to be switched with F3 and at forward motion off → CV#53 = 17 (= 16 + 1)					

Settings for the flash lights

Name of CVs / registers	CV-no.	Rg-no.	Input value (Default)	Remarks and Tips	
Keying ration of the flash lights				= Phase´s length of the on-/off states	
AUX1	61	34	0...255 (255)	lighting off	0
AUX2	62	35	0...255 (255)	regular flashing light	128
				continuous lighting	255
Flashing frequency of the lighting	112	38	10 ... 255 (48)	Settings common for all lighting	
				10 = highest frequency	
				255 = lowest frequency	
Examples for the flashin frequency: CV#112 = 10 → 2 Hz / CV#112 = 48 → 0,7 Hz CV#112 = 100 à 0,25 Hz / CV#112 = 255 → 0,125 Hz					

9. Check list for troubleshooting

- Parts are getting very hot and/or start to smoke.

⚠ Disconnect the system from the mains immediately!

Possible cause: one or more connections are soldered incorrectly. → Check the connections.

Possible cause: Short circuit. The decoder is connected to locomotive or carriage ground. → Check the connections. A short circuit can result in irreparable damage.

Problems with the function decoder area of the FD-R Basic

- After programming, the FD-R Basic does not react as intended.

  Possible cause: The set values for the CV are inconsistent. → Perform a decoder reset and first test the decoder with the default values. Program the decoder anew.

  Possible cause: Instead of saving the settings into the function decoder area the settings were saved into the RailCom area of the FD-R Basic. → Program the function decoder area anew, making sure that in CV#29 RailCom is set "off".

- An output cannot be switched on.

  Possible cause: The values set in CV# 53 and 54 for an output, contradict one another. → Alter the values for CV #53 and 54.

- The lighting does not correspond to the direction of travel.

  Possible cause: The configuration data (CV29) of the locomotive decoder in the train vary from the configuration data programmed in the function decoder. → Change the programming or the function or the deocder.

- The decoder does not react in analogue mode.

  Possible cause: The analogue mode is switched off. → Alter the value for CV #29.

- The lighting goes on and off when the speed levels are turned up or the lighting cannot be switched on or off.

  Possible cause: The speed mode of the decoder and the digital control unit do not correspond. Example: The central is set to the mode 28 speed levels, but the decoder to the mode 14 speed levels. → Change the speed mode at the central and / or at the decoder.

Problems with the RailCom area of the FD-R Basic

- The CV values cannot be read out.

  Possible cause: RailCom is switched off. → Alter the value of CV#29.

  Possible cause: The settings of the function decoder area have not been transferred into the RailCom area. → Program the RailCom area with the data of the function decoder area.

  Please note: When operating the FD-R Basic together with another decoder, only the decoder´s settings are transferred via RailCom. Only when the FD-R Basic is used as a function decoder with a particular address, its data are transferred.

- A combination of the FD-R Basic and another decoder cannot be programmed together or the data cannot be read out from one of the modules.

  Possible cause: This malfunction occurs especially with older DCC decoders. → In most cases you can sidestep this malfunction by programming the RailCom area of the FD-R Basic and the decoder via main track programming. In case this does not work as well, you should read out or program the RailCom area of the FD-R Basic and the decoder individually. For that purpose interrupt the connection to the rail connector of that module that is not going to be programmed.

Problems with the combined decoder

- After programming the FD-R Basic the decoder combined with the FD-R Basic does not react like before.

  Possible cause: You have altered values in the function decoder area of the FD-R Basic. As the other decoder´s address is the same as the one of the FD-R Basic, the changes were taken over for the decoder as well. → Set RailCom to "on" and programm the decoder anew. The settings will be taken over automatically into the RailCom area of the FD-R Basic, the function decoder area of the FD-R Basic will be unchanged.

Hotline: If problems with your decoder occur, our hotline is pleased to help you (mail address on the last page).

Repairs: You can send in a defective decoder for repair (address on the last page). In case of guarantee the repair is free of charge for you. With damages not covered by guarantee, the maximum fee for the repair is 50 % of the sales price according to our valid price list. We reserve the right to reject the repairing of a decoder when the repair is impossible for technical or economic reasons.

Please do not send in decoders for repair charged to us. In case of warranty we will reimburse the forwarding expenses up to the flat rate we charge according to our valid price list for the delivery of the product. With repairs not covered by guarantee you have to bear the expenses for sending back and forth.

10. Guarantee bond

For this product we issue voluntarily a guarantee of 2 years from the date of purchase by the first customer, but in maximum 3 years after the end of series production. The first customer is the consumer first purchasing the product from us, a dealer or another natural or juristic person reselling or mounting the product on the basis of self-employment. The guarantee exists supplementary to the legal warranty of merchantability due to the consumer by the seller.

The warranty includes the free correction of faults which can be proved to be due to material failure or factory flaw. With kits we guarantee the completeness and quality of the components as well as the function of the parts according to the parameters in not mounted state. We guarantee the adherence to the technical specifications when the kit has been assembled and the ready-built circuit connected according to the manual and when start and mode of operation follow the instructions.

We retain the right to repair, make improvements, to deliver spares or to return the purchase price. Other claims are excluded. Claims for secondary damages or product liability consist only according to legal requirements.

Condition for this guarantee to be valid, is the adherence to the manual. In addition, the guarantee claim is excluded in the following cases:

- if arbitrary changes in the circuit are made,
- if repair attempts have failed with a ready-built module or device,
- if damaged by other persons,
- if damaged by faulty operation or by careless use or abuse.

11. Declaration of conformity

This product conforms with the EC-directives mentioned below and is therefore CE certified.

2004/108/EG on electromagnetic. Underlying standards: EN 55014-1 and EN 61000-6-3. To guarantee the electromagnetic tolerance in operation you must take the following precautions:

- Connect the transformer only to an approved mains socket installed by an authorised electrician.
- Make no changes to the original parts and accurately follow the instructions, connection diagrams and PCB layout included with this manual.
- Use only original spare parts for repairs.

2011/65/EG on the restriction of the use of certain hazardous substances in electrical and electronic equipment (ROHS). Underlying standard: EN 50581.

12. Declarations conforming to the WEEE directive

This product conforms with the EC-directive 2012/19/EG on waste electrical and electronic equipment (WEEE).

DE 37847206

The Tams Elektronik GmbH is registered with the WEEE-no. DE 37847206, according to. § 6 sect. 2 of the German electro regulations from the responsible authority for the disposal of used electro equipment.

Don´t dispose of this product in the house refuse, bring it to the next recycling bay.

Information and tips:

http://www.tams-online.de

Warranty and service:

Tams Elektronik GmbH

Fuhrberger Straße 4

DE-30625 Hannover

fon: +49 (0)511 / 55 60 60

fax: +49 (0)511 / 55 61 61

e-mail: modellbahn@tams-online.de

DE 37847206