Anleitung | Manual | Mode d´emploi | Handleiding

Servoplatine

Art. 70-05900

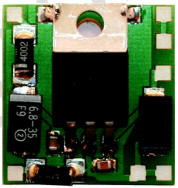

-

Servo PCB

Platine pour servomoteur

Servoprint

tams elektronik

Table of contents

1. Getting started

How to use this manual

This manual gives step-by-step instructions for safe and correct connecting of the module, and operation. Before you start, we advise you to read the whole manual, particularly the chapter on safety instructions and the checklist for trouble shooting. You will then know where to take care and how to prevent mistakes which take a lot of effort to correct.

Keep this manual safely so that you can solve problems in the future. If you pass the module on to another person, please pass on the manual with it.

Intended use

The Servo PCB is designed to be operated according to the instructions in this manual in model building, especially with model railways. Any other use is inappropriate and invalidates any guarantees.

The Servo PCB should not be mounted by children under the age of 14.

Reading, understanding and following the instructions in this manual are mandatory for the user.

Checking the package contents

Please make sure that your package contains:

- one module,
- one manual.

Required materials

For mounting and connecting the module you need:

- an electronic soldering iron (max. 30 Watt) or a regulated soldering iron with a fine tip and a soldering iron stand,
- a tip-cleaning sponge,
- a heat-resistant mat,
- a small side cutter, wire stripper and a pair of tweezers,
- electronic tin solder (0,5 mm. Diameter),
- wire, recommended diameters: $\geq$ 0,10 mm² for all connections.

There is no servo included in the package. The dimensions of the servo PCB correspond to those of the side surface of the 9 g Servo of Robbe (Tams item no. 70-05100).

2. Safety instructions

Mechanical hazards

Cut wires can have sharp ends and can cause serious injuries. Watch out for sharp edges when you pick up the PCB.

Visibly damaged parts can cause unpredictable danger. Do not use damaged parts: recycle and replace them with new ones.

Electrical hazards

- Touching powered, live components,
- touching conducting components which are live due to malfunction,
- short circuits and connecting the circuit to another voltage than specified,
- impermissibly high humidity and condensation build up

can cause serious injury due to electrical shock. Take the following precautions to prevent this danger:

- Never perform wiring on a powered module.
- Assembling and mounting the kit should only be done in closed, clean, dry rooms. Beware of humidity.
- Only use low power for this module as described in this manual and only use certified transformers.
- Connect transformers and soldering irons only in approved mains sockets installed by an authorised electrician.
- Observe cable diameter requirements.
- After condensation build up, allow a minimum of 2 hours for dispersion.
- Use only original spare parts if you have to repair the kit or the ready-built module.

Fire risk

Touching flammable material with a hot soldering iron can cause fire, which can result in injury or death through burns or suffocation.

Connect your soldering iron or soldering station only when actually needed. Always keep the soldering iron away from inflammable materials. Use a suitable soldering iron stand. Never leave a hot soldering iron or station unattended.

Thermal danger

A hot soldering iron or liquid solder accidentally touching your skin can cause skin burns. As a precaution:

- use a heat-resistant mat during soldering,
- always put the hot soldering iron in the soldering iron stand,
- point the soldering iron tip carefully when soldering, and
- remove liquid solder with a thick wet rag or wet sponge from the soldering tip.

Dangerous environments

A working area that is too small or cramped is unsuitable and can cause accidents, fires and injury. Prevent this by working in a clean, dry room with enough freedom of movement.

Other dangers

Children can cause any of the accidents mentioned above because they are inattentive and not responsible enough. Children under the age of 14 should not be allowed to work with this kit or the ready-built module.

Caution:

Little children can swallow small components with sharp edges, with fatal results! Do not allow components to reach small children.

In schools, training centres, clubs and workshops, assembly must be supervised by qualified personnel.

In industrial institutions, health and safety regulations applying to electronic work must be adhered to.

3. Safe and correct soldering

Caution:
Incorrect soldering can cause dangers through fires and heat. Avoid these dangers by reading and following the directions given in the chapter **Safety instructions**.

- Use a small soldering iron with max. 30 Watt. Keep the soldering tip clean so the heat of the soldering iron is applied to the solder point effectively.
- Only use electronic tin solder with flux.
- When soldering electronic circuits never use soldering-water or soldering grease. They contain acids that can corrode components and copper tracks.
- Solder quickly: holding the iron on the joints longer than necessary can destroy components and can damage copper tracks or soldering eyes.
- Apply the soldering tip to the soldering spot in such a way that the wire and the soldering eye are heated at the same time. Simultaneously add solder (not too much). As soon as the solder becomes liquid take it away. Hold the soldering tip at the spot for a few seconds so that the solder flows into the joint, then remove the soldering iron.
- The joint should be held still for about 5 seconds after soldering.
- To make a good soldering joint you should use a clean and unoxidised soldering tip. Clean the soldering tip with a damp piece of cloth, a damp sponge or a piece of silicon cloth.
- After soldering check (preferably with a magnifying glass) tracks for accidental solder bridges and short circuits. This would cause faulty operation or, in the worst case, permanent damage. You can remove excess solder by putting a clean soldering tip on the spot. The solder will become liquid again and flow from the soldering spot to the soldering tip.

4. Operation overview

Typical servos for model building need a voltage of 5 V and a current of up to 1 A. The servo PCB is used when a circuit sends a servo signal but cannot supply the voltage and / or current required for the servo.

Application examples:

- Vehicle decoders (locomotive or function decoders) providing a servo signal at an output. Generally, both maximum total current and voltage at the servo output are too low to supply a servo.
- Other circuits controlling servos (e.g. servo decoders or analogue servo controls). Usually, these circuits are designed for the direct connection of servos. In case further servos are to be connected to the same circuit, the maximum current often does not suffice.

5. Technical specifications

Supply voltage d.c. or digital voltage a.c. voltage	 max. 30 V max. 20 V
Max. current for servo output peak (up to 10 sec.) / permanent	 1.000 mA / 500 mA
Protected to	IP 00
Ambient temperature in use	0 ... +60 °C
Ambient temperature in storage	-10 ... +80 °C
Comparative humidity allowed	max. 85 %
Dimensions of the PCB (approx.)	23 x 23 mm
Weight of the circuit (approx.)	5 g

6. Connecting the Servo PCB

Pin assignment

X1	voltage supply	X1 = + | ~
X2		X2 = ⊥ | ~
X3	external circuit	servo signal
X4	servo	signal (PWM)
X5		voltage supply (+5V)
X6		earth (GND)
X7	external circuit	earth connection

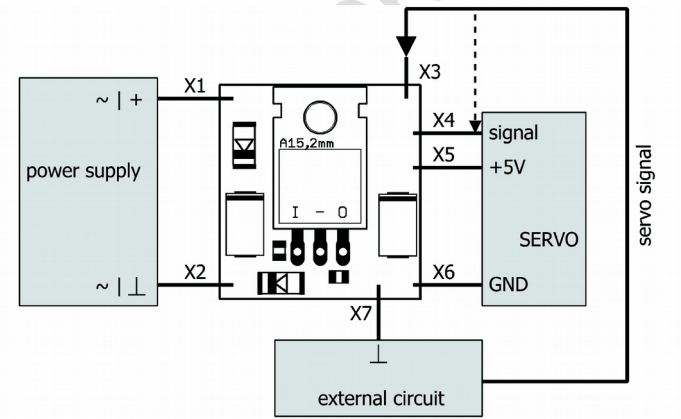

Connecting the voltage supply

When connecting to a d.c. voltage observe the polarity of voltage supply. When connecting the module to digital or a.c. voltage the polarity is of no importance.

When using the servo PCB in combination with a vehicle decoder, connect X1 and X2 in parallel to the decoder´s connections to the current collector or the slider.

Connection to an external circuit

You can connect the external circuit´s output providing the servo signal directly to the servo. In most cases connecting all pins of the servo to the servo PCB and connecting the external circuit´s servo output to the Servo PCB makes handling easier.

Connect connection pin X7 of the servo PCB to the earth connection of the external circuit.

Attention: Do not connect the earth connection of the servo PCB to the decoder´s return conductor. Risk of short circuit! Components on the servo PCB and the deocder can be damaged.

Connecting a servo

Do not connect a servo to the servo PCB consuming more than 1 A current. The pin assignment differs with the different servo manufacturers both as to the order and to the connecting cables´colour. Normally, the red connecting wire is intended for the voltage supply (+ 5 V). Check the specifications given by the servo manufacturer.

Attention: When swaping the connections for earth and voltage supply, the servo can be damaged.

Fixing the servo PCB

You can fix the servo PCB with double-sided adhesive tape, e.g. in a vehicle or on the servo´s side surface.

7. Check list for troubleshooting

- Parts are getting too hot and/or start to smoke.

  ⚠ Disconnect the system from the mains immediately!

  Possible cause: the module is defective. → Send in the module for repair.

- The Servo does not react to servo signals.

  Possible cause: The servo has been connected faultily. → Check the connections, especially the pin assignment.

  Possible cause: The voltage supply has been connected faultily. → Check the connections.

  Possible cause: The external circuit does not send a control signal. → Check the external circuit.

Hotline: If problems with your module occur, our hotline is pleased to help you (mail address on the cover page).

Repairs: You can send in a defective module for repair (address on the cover page). In case of guarantee the repair is free of charge for you. With damages not covered by guarantee, the maximum fee for the repair is the difference between the price for the ready-built module and the kit according to our valid price list. We reserve the right to reject the repairing of a module when the repair is impossible for technical or economic reasons.

Please do not send in modules for repair charged to us. In case of warranty we will reimburse the forwarding expenses up to the flat rate we charge according to our valid price list for the delivery of the product. With repairs not covered by guarantee you have to bear the expenses for sending back and forth.

8. Guarantee bond

For this product we issue voluntarily a guarantee of 2 years from the date of purchase by the first customer, but in maximum 3 years after the end of series production. The first customer is the consumer first purchasing the product from us, a dealer or another natural or juristic person reselling or mounting the product on the basis of self-employment. The guarantee exists supplementary to the legal warranty of merchantability due to the consumer by the seller.

The warranty includes the free correction of faults which can be proved to be due to material failure or factory flaw. With kits we guarantee the completeness and quality of the components as well as the function of the parts according to the parameters in not mounted state. We guarantee the adherence to the technical specifications when the kit has been assembled and the ready-built circuit connected according to the manual and when start and mode of operation follow the instructions.

We retain the right to repair, make improvements, to deliver spares or to return the purchase price. Other claims are excluded. Claims for secondary damages or product liability consist only according to legal requirements.

Condition for this guarantee to be valid, is the adherence to the manual. In addition, the guarantee claim is excluded in the following cases:

- if arbitrary changes in the circuit are made,
- if repair attempts have failed with a ready-built module or device,
- if damaged by other persons,
- if damaged by faulty operation or by careless use or abuse.

9. EU declaration of conformity

This product conforms with the EC-directives mentioned below and is therefore CE certified.

2004/108/EG on electromagnetic. Underlying standards: EN 55014-1 and EN 61000-6-3. To guarantee the electromagnetic tolerance in operation you must take the following precautions:

- Connect the transformer only to an approved mains socket installed by an authorised electrician.
- Make no changes to the original parts and accurately follow the instructions, connection diagrams and PCB layout included with this manual.
- Use only original spare parts for repairs.

2011/65/EG on the restriction of the use of certain hazardous substances in electrical and electronic equipment (ROHS). Underlying standard: EN 50581.

10. Declarations conforming to the WEEE directive

This product conforms with the EC-directive 2012/19/EG on waste electrical and electronic equipment (WEEE).

DE 37847206

The Tams Elektronik GmbH is registered with the WEEE-no. DE 37847206, according to. § 6 sect. 2 of the German electro regulations from the responsible authority for the disposal of used electro equipment.

Don´t dispose of this product in the house refuse, bring it to the next recycling bay.

Aktuelle Informationen und Tipps:
Information and tips:
Informations et conseils:
Actuele informatie en tips:

http://www.tams-online.de

Garantie und Service:
Warranty and service:
Garantie et service:
Garantie en service:

Tams Elektronik GmbH

Fuhrberger Straße 4
DE-30625 Hannover
fon: +49 (0)511 / 55 60 60
fax: +49 (0)511 / 55 61 61
e-mail: modellbahn@tams-online.de

DE 37847206